4 Port C/Ku Band Prime Focus Wideband Feed (#FEED-SVY-ESA124DB)

REVISIONS					
ECO#	REV	DESCRIPTION	DRWN BY	DATE	APPROVED
	X1	PRELIMINARY ONLY	MJS	10-07-10	

DO NOT SCALE PRINT

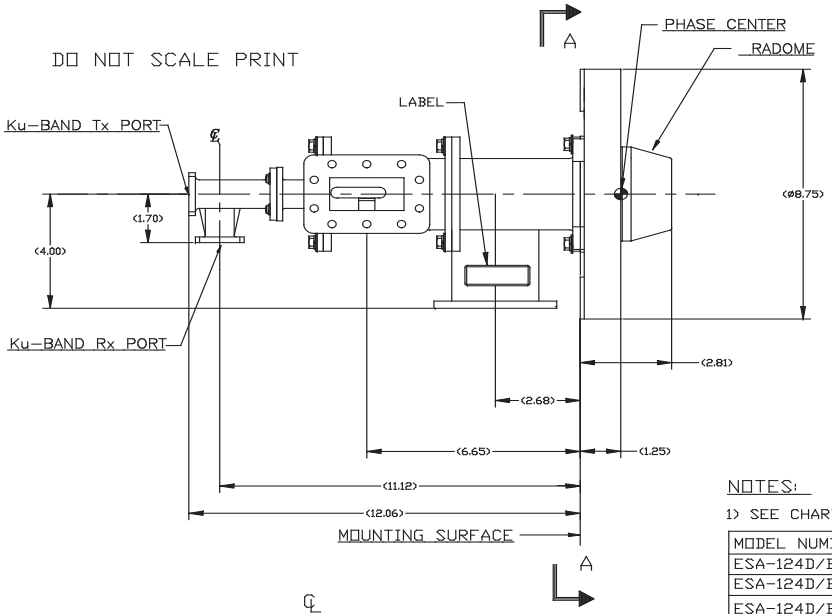

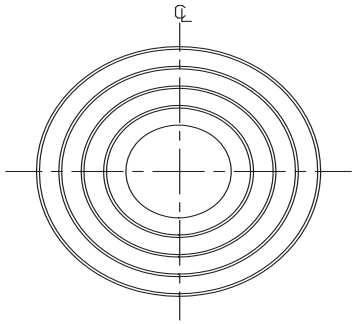

NOTE: FOR -2 VARIATIONS USE 7907-01-1 FACEPLATE.

NOTES:

1) SEE CHART FOR MODEL NUMBER AND PART NUMBER:

MODEL NUMBER	PART NUMBER	F/D RATIO
ESA-124D/B-1	8538-881-1	.30-.34
ESA-124D/B-2	8538-881-2	.35-.42
ESA-124D/B-3	8538-881-3	.43-.55

2) O-RINGS ARE INSTALLED BETWEEN ALL MATING SURFACES.
3) SEE CHART BELOW FOR ELECTRICAL SPECIFICATIONS.
4) SEE SECTION A-A FOR MOUNTING DETAILS.
5) OUTPUT PORTS: Ku-Band WR-75F
C-Band CPR-229F
6) ORIENTATION OF Ku BAND PORT IS NOT CRITICAL

CAUTION:
7) WHEN MANUALLY PEAKING POLARIZATION, EXTREME CARE MUST BE TAKEN TO AVOID DAMAGE TO INNER BRASS Ku CIRCULAR WAVEGUIDE
8) MAKE CERTAIN O-RING IS PROPERLY ALIGNED BEFORE REASSEMBLING

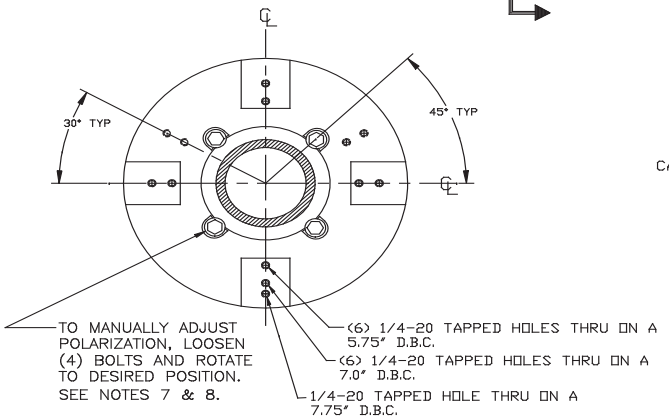

SECTION A-A

SPECIFICATIONS:	C-BAND	Ku-BAND	Ku-BROADBAND
FREQUENCY	3.4-4.2 GHz	* SEE FMM-02	10.95-12.75 dB
POLARIZATION	DUAL LINEAR	DUAL LINEAR	DUAL LINEAR
RETURN LOSS	12 dB MIN	14 dB MIN	12 dB MIN
ISOLATION	24 dB MIN	30 dB MIN	30 dB MIN
CROSS-POL	24 dB MIN	23 dB MIN	23 dB MIN

PRELIMINARY ONLY

NEXT ASSY.	USED ON

FINISH
"CHROMATE PER MIL-C-5541
CLASS 1A" & WHITE PAINT

MATERIAL
ALUMINUM 6061-T6
HARDWARE S.STEEL

REMOVE ALL BURRS AND SHARP EDGES
DO NOT SCALE DRAWING
WORKMANSHIP SHALL BE IN ACCORDANCE WITH MIL-STD-454, REQT 9.

UNLESS OTHERWISE SPECIFIED DIMENSIONS ARE IN INCHES

ANGLES	HOLE DIA TOLERANCES	LINEAR
±1°	.0135-.250 +.005 -.001 .251-.500 +.006 -.001 .501-1.000 +.010 -.001	.X = ±.06 .XX = ±.02 .XXX = ±.010

DRAWN:	M.J.SCAFIDI	DATE 10-07-10
CHECKED:		DATE
PROJ. ENG:		DATE
ENG. DEPT:		DATE
MFG. DEPT:	J.WALSH	DATE
Q.A. DEPT:		DATE

DRAWING TITLE
ESA-124D/B

SIZE	CAGE CODE	DWG NO.	REV
C	60173	8538-881	X1

SCALE | WT | SHEET 1 OF 1